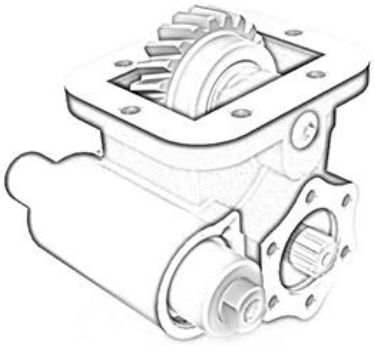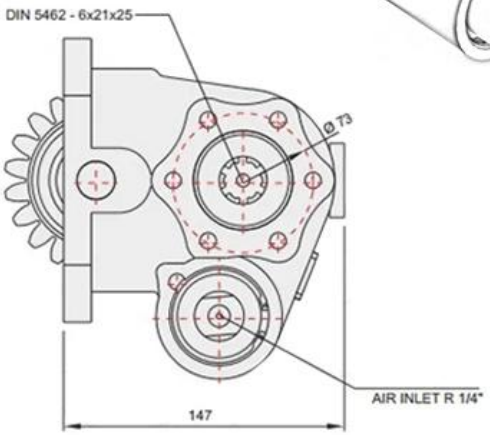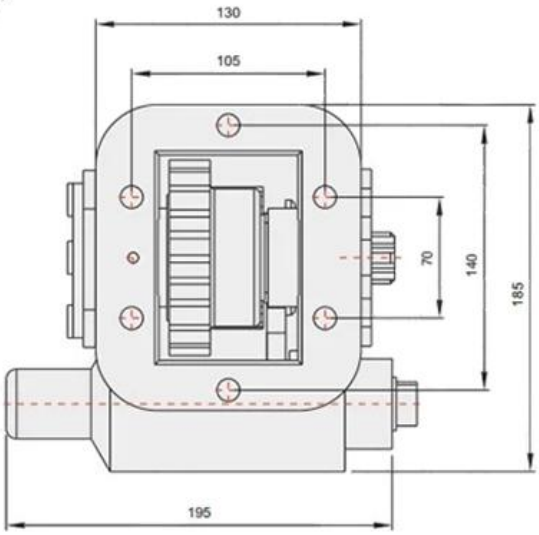12874 [mm]